Implementation of FIR Digital Filter on FPGA

Vandana Dhillon
Electronics and Telecommunication
Fr.C. Rodrigues Institute of Technology, Vashi,
Navi Mumbai, India
vandana31d@gmail.com

Sreedevi Nair
Electronics and Telecommunication
Fr.C. Rodrigues Institute of Technology, Vashi,
Navi Mumbai, India
nair.sreedevi@fcrit.ac.in

Amruta Pabarekar
Electronics and Telecommunication
Fr.C. Rodrigues Institute of Technology, Vashi,
Navi Mumbai, India
amruta.pabarekar@fcrit.ac.in

Manoj Kumbhare
Scientist 'C'
Society for Applied Microwave Electronics Eng. & Research,
Mumbai, India
manojkumbhare@sameer.gov.in

Kiran Thakur
Scientist 'E'
Society for Applied Microwave Electronics Eng. & Research,
Mumbai, India
kiran@sameer.gov.in

R Krishnan
Scientist 'F'
Society for Applied Microwave Electronics Eng. & Research,
Mumbai, India
krishnan@sameer.gov.in

***Abstract*— Most of the industries use filtering methods in many fields like telecommunications, biomedical, signal processing and testing etc. Many techniques are available for use in analog as well as digital domains. The important part is to use the techniques which give us high speed and minimum distortion. The work presented in this paper focuses to remove unwanted noise from a 6us pulse wave generated in high energy Medical Linear Accelerators developed for treatment of cancer. As a prototype, pulse wave of 6us is first generated using NI (National Instruments) Multisim software and is also tested in MATLAB and LabView. VHDL (Very High-Speed Integrated Circuit Hardware Description Language) code is then generated for Lowpass Digital FIR (Finite Impulse Response) filter using MATLAB FDATool which gives similar response as that of Bessel filter. The filter is implemented on Spartan 3A XC3S700A series FPGA (Field Programmable Gate Array) and simulated with the help of ISE (Integrated Software Environment) Xilinx (v14.7) software to generate FPGA response. It was observed that FPGAs provide edge in digital filtering process over other techniques in terms of cost effectiveness, design flexibility, high performance and low power consumption in real time implementations.**

Keywords*— *Digital FIR filter, Bessel filter, MATLAB, LabView, Kaiser Window, FPGA.

I. INTRODUCTION

A high energy Medical LINAC (Linear Accelerators) is a cancer therapy machine developed by SAMEER (Society for Applied Microwave Electronics Engineering & Research, Ministry of Electronics & Information Technology Government of India). The existing model consisted of Bessel digital filter for removal of noise from 6us pulse wave. However, due to unavailability of Bessel digital filter simulation blocks in MATLAB, new prototype was to be developed to achieve compatibility between MATLAB and Xilinx software. FDATool files from MATLAB are used to generate filter co-efficient and are added to compatible Xilinx target device for simulation on FPGA. The modelling method used in previous works was of DSP Builder system with direct linear phase Fir low pass filter. [1] The comparison with Quartus II software and Xilinx ISE showed that simulation modelled in Xilinx ISE used less resources and power than the other. The other work discussed linear phase architecture for FIR filter implementation. [4] This architecture didn't prove efficient for this high energy pulse so another architecture was to be used for filter design. This paper discusses removal of unwanted noise from 6us pulse wave of high energy using MATLAB and Xilinx tools.

II. OBJECTIVE

The main objective is to design and analyze the output of digital filter which gives best comparable magnitude and phase response as that of Bessel digital filter for pulse wave to be filtered using FPGA. The circuit diagram that generates pulse in Medical LINAC was simulated in NI Multisim software. The output file of NI Multisim which generates the pulse is given as input to Bessel digital filter in LabView for comparative purposes. Since MATLAB doesn't support design of Digital Bessel filter, an alternate design was tried using other filters to resemble Bessel output so that VHDL code can be generated and

2021 4th Biennial International Conference on Nascent Technologies in Engineering (ICNTE) | 978-1-7281-9061-7/21/$31.00 ©2021 IEEE | DOI: 10.1109/ICNTE51185.2021.9487744

978-1-7281-9061-7/21/$31.00 ©2021 IEEE

Authorized licensed use limited to: ST. JOSEPH ENGINEERING COLLEGE MANGALORE. Downloaded on April 30,2026 at 04:22:54 UTC from IEEE Xplore. Restrictions apply.

simulated on Xilinx FPGA. Using FPGA provides many benefits in real time digital signal processing in terms of resource utilization. FPGAs provide support and solution to various issues faced while designing and also implementing a Digital Filter like memory restraint, complexity in computations, effects of finite-word-length which affect the overall process and configuration of filter design. This filtered output of pulse wave can now be safely used in Medical Application for Cancer treatment of LINAC.

III. FIR DIGITAL FILTER

The technology advancement in programmable digital signal processors helps to implement more and more real-time applications in digital systems.[10] Design, implementation and verification procedures are easily executable for filters which are a basic component of all signal processing and telecommunication systems. The basic filter functions include restriction of bandwidth, sub-band formation of signals, frequency spectrum modification of signals, removal of unwanted noise and so on. The important part for designing is to study the behavior of filters for various structures, order of filter, frequency specifications and desirable output conditions. These factors play a vital role in finalizing filter type for a particular aim. In FIR (Finite duration Impulse Response) system, the impulse response consists of finite number of samples.

The system acts as a window that views only most recent N samples and ignores all prior samples to input. [10] Hence a memory of length N is required for FIR system.

A recursive filter or IIR (Infinite duration Impulse Response) filter has feedback from output to input, and in general its output is a function of the previous output samples and the present and past input samples. This type of system is more unstable as compared to FIR system.

There are two steps for designing a filter that is to find the filter co-efficient so that required magnitude and phase response is generated and implementing the digital filter with the determined co-efficient. There are different structures and forms available to interconnect and configure various elements of filters like adders, memory elements, multipliers, registers and so on. All these forms help to realize the specific equations for filter design. The direct-form structure provides a convenient method for the implementation of FIR filters as shown in Fig. 1.

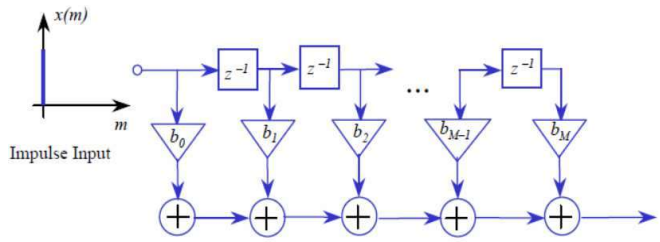

Fig. 1. Direct form FIR Filter Structure[10]

IV. METHODOLOGY

A. NI Multisim Implementation of Pulse Wave

The 6us pulse wave is generated in NI Multisim software by creating circuit diagram of specification as originally present in hardware as high frequency input. The specifications of circuit elements are C1=C2=C3=C4=C5=C6=0.047uF, L1=L2=L3=L4=L5=L6=7uH and R=12.5Ω. The circuit diagram is shown in Fig. 2.

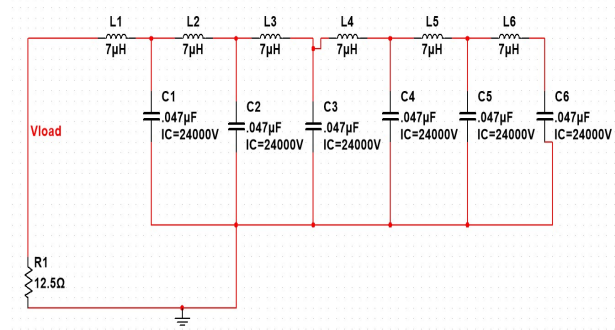

Fig. 2. Circuit diagram for 6us pulse generation in NI Multisim

The output of the circuit diagram is 6us pulse wave that is Ton=6us which is to be passed without attenuation or distortion. This output is to be saved as .lvm extension so that it can be read by LabView software to provide it as input file to the Bessel lowpass digital filter. The pulse wave is shown in Fig. 3.

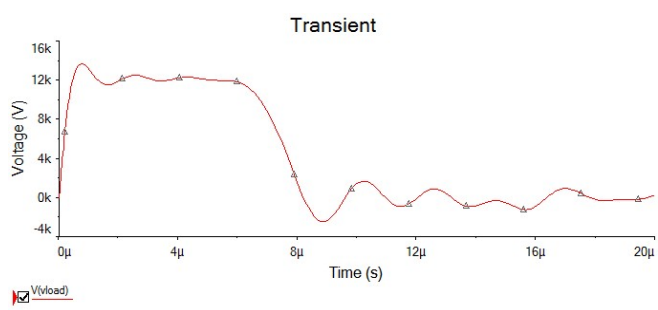

Fig. 3. Output of generated 6us pulse in NI Multisim

Authorized licensed use limited to: ST. JOSEPH ENGINEERING COLLEGE MANGALORE. Downloaded on April 30,2026 at 04:22:54 UTC from IEEE Xplore. Restrictions apply.

B. LabView Implementation of Digital Filter

The Bessel Digital Filter gives optimum response to pulse without much delay and attenuation so it is used in simulation for LabView software which consists of specified block for Bessel Lowpass Digital Filter. The cut-off frequency is set as 180 kHz and sampling frequency as 370 kHz. The order of filter after many iterations and comparisons between 2, 6, 8, 10 and 15 was selected as 15 as it gave best possible resemblance to original pulse as well as for stability using FPGA implementation at later stage. The Fig. 4 shows the blocks used to implement Bessel filter in LabView software.

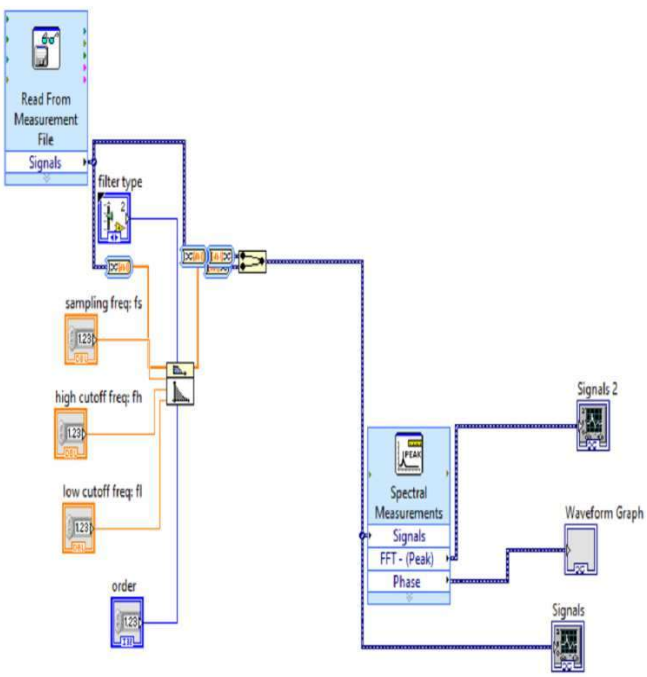

Fig. 4. Bessel digital filter implementation setup in LabView

The Fig. 5 shows the magnitude response of the Bessel Digital Filter after simulation in LabView. The signal displayed in white colour is the original signal given as input to the Filter from the .lvm file generated from NI Multisim software. The red coloured signal is the filtered signal generated as output from Bessel Digital Lowpass Filter of order 15. It can be observed that the output signal is slightly shifted due to group delay but it has attenuated the signal from unwanted peak values and noise is reduced for pulse wave.

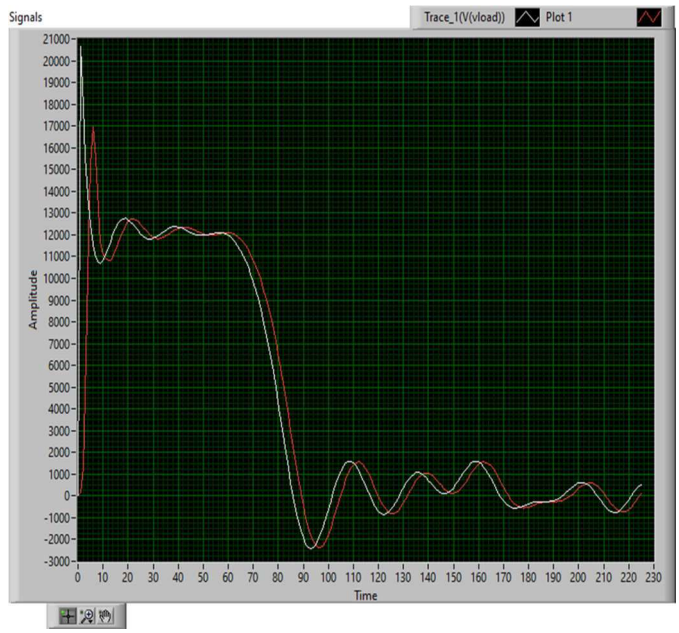

Fig. 5. Output of Bessel digital filter for 6us pulse wave in LabView

C. Digital FIR Filter Implementation on MATLAB

The Fig. 6 shows the magnitude and phase response for Bessel Lowpass Digital Filter with direct form structure with cut-off frequency 180 kHz giving approximately -3dB at cut-off frequency.

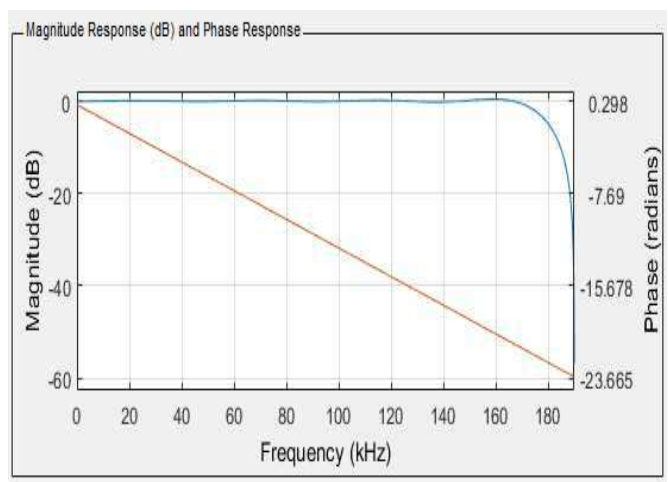

Fig. 6. MATLAB FDATool output for Direct Form Digital FIR Filter

The details of designed FIR Direct Form Lowpass Filter are given in Fig. 7.

Authorized licensed use limited to: ST. JOSEPH ENGINEERING COLLEGE MANGALORE. Downloaded on April 30,2026 at 04:22:54 UTC from IEEE Xplore. Restrictions apply.

```
Discrete-Time FIR Filter (real)
-------------------------------
Filter Structure  : Direct-Form FIR
Filter Length     : 16
Stable            : Yes
Linear Phase      : Yes (Type 2)
Arithmetic        : fixed
Numerator         : s16,15 -> [-1 1)
Input             : s16,15 -> [-1 1)
Filter Internals  : Full Precision
  Output          : s33,30 -> [-4 4)   (auto determined)
  Product         : s31,30 -> [-1 1)   (auto determined)
  Accumulator     : s33,30 -> [-4 4)   (auto determined)
  Round Mode      : No rounding
  Overflow Mode   : No overflow

Implementation Cost
Number of Multipliers             : 16
Number of Adders                  : 15
Number of States                  : 15
Multiplications per Input Sample  : 16
Additions per Input Sample        : 15
```

Fig. 7. Direct Form Digital FIR Filter specification in FDATool

V. RESULTS

The compatibility between MATLAB and Xilinx ISE allows for co-simulation of filter co-efficient files and VHDL code to be run successfully on FPGA in Xilinx. Simulations were carried out using Xilinx software where designer can specify combinational logic and abstraction level for registers and other components. This is also known as design for 'Top Level'. The results for Register Transfer Level (RTL) file is presented in Fig. 8.

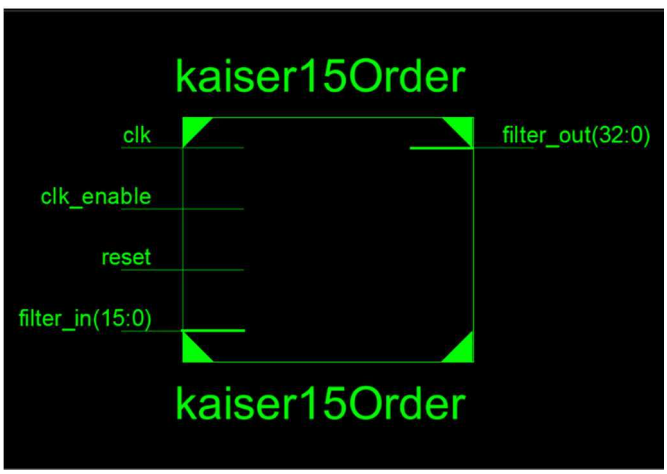

Fig. 8. Xilinx RTL file for Kaiser Window Lowpass Digital FIR Filter

The source files, filter co-efficient file and VHDL code generated from FDATool were added to target device FPGA Spartan 6A and the top modules was implemented using hierarchy. After running the implementation checks for all steps, the ISE simulator was run to check the FPGA filter output. After successful simulation, the device utilisation summary was analysed for device performance and verification. The details of device utilisation summary are shown in TABLE I.

TABLE I. DEVICE UTILISATION SUMMARY FILE FOR FPGA FOR DIGITAL FIR FILTER

Device Utilization Summary			
Logic Utilization	**Used**	**Available**	**Utilization**
Number of Slice Flip Flops	128	11776	1%
Number of 4 input LUTs	159	11776	1%
Number of occupied Slices	128	5888	2%
Total Number of 4 input LUTs	159	11776	1%
Number of bonded IOBs	51	372	13%
Number of BUFGMUXs	1	24	4%
Number of MULT18X18SIOs	6	20	30%

The digital clock wave output generated by FPGA for both input and output signals are shown in Fig. 9.

The result of the Xilinx ISE simulation for FPGA shows that better and faster performance can be achieved in digital domain for filtering of signals. The execution time and resources utilized are also reasonably less than the other methods available in technical domain. The Xilinx software provides lot of features to customize the filter design for better outcome. The total time utilization and clock speed of FPGA can also be checked while implementing the filter. The clock report shown in TABLE II states the max delay time taken by device for implementation of filter and it is 1.713ns.

Authorized licensed use limited to: ST. JOSEPH ENGINEERING COLLEGE MANGALORE. Downloaded on April 30,2026 at 04:22:54 UTC from IEEE Xplore. Restrictions apply.

Fig. 9. FPGA output for Digital FIR Filter

TABLE II. CLOCK REPORT FILE FOR FPGA FOR DIGITAL FIR FILTER

Clock Report					
Clock Net	**Resource**	**Locked**	**Fanout**	**New Skew (ns)**	**Max Delay (ns)**
Clk_BUFGP	BUFGMUX	NO	145	0.224	1.713

VI. CONCLUSION

The design and simulation of Lowpass Digital FIR Filter using FPGA gives suitable output response for pulse wave to pass without distortion and attenuation. FPGA filter implementation provides better response than ASIC since it is completely customizable, saves power and is cost effective due to flexibility in design customization. The maximum delay achieved is in 1.713ns which is practically considerable in high energy applications. Also the resource utilization in terms of devices and space for filter design is better than traditional methods. The simulation works of NI Multisim, MATLAB, LabView and Xilinx ISE are significant for processing the targeted pulse wave for Medical LINAC.

VII. FUTURE SCOPE

The further step of this project can be achieved by implementation on hardware platform using FPGA and Xilinx software kit to analyze the pulse response in real time. This co-simulation process could give demonstration of filter efficiency and filter order could be varied to study different filter responses on this pulse wave so as to find the best suitable schematic on hardware.

REFERENCES

[1] Gao Jinding, Hou Yubao, Su Long, "Design and FPGA Implementation of Linear FIR Low-pass Filter Based on Kaiser Window Function", International Conference on Intelligent Computation Technology and Automation (ICICTA), vol.2, no., pp.496-498, 28-29 March 2011. doi: 10.1109/ICICTA.2011.408

[2] Xilinx Inc., "System Generator for DSP": User Guide, Release10.1, Snn Jose, Clifornia, USA, PP.1-40: www.xilinx.com, 2008 [9] Xilinx, Inc

[3] S K Mitra, 'Digital Signal Processing: A Computer Science based Approach', McGraw Hill Publications.

[4] R.Raja Sulochana , Vasujadevi Midasala,S Nagakishore Bhavanam, Jeevan Reddy K,"Design and Implementation of FPGA based Low Power Digital FIR Filter" Journal of Electronics and Communication Engineering, volume 4,2012.

[5] M. Lutovac, D. Tošić, and B. Evans, "Filter design for signal processing using MATLAB and Mathematica," Miroslav Lutovac, 2001.

[6] S. Winder, "Analog and digital filter design," Newnes, 2002.

[7] Xilinx, Inc.,"DSP Design Flows in FPGA Tutorial Slides". San Jose, California, USA, pp. 1-82, 2003.

[8] Heejong Yoo, David V.anderson, "Hardware-efficient distributed arithmetic architecture for high-order digital filters" in proc. IEEE International conference on Acoustics, speech, and signal processing (ICASSP'05),vol.5, pp.125-128 2005. doi: 10.1109/ICASSP.2005.1416256

[9] Damian, C. Lunca, E., "A low area FIR filter for FPGA implementation", 34th International Conference on Telecommunications and Signal Processing (TSP), pp.521-524, 18-20 Aug. 2011. doi: 10.1109/TSP. 2011.6043675

[10] Nagoor Kani,'Digital Signal Processing', McGraw Hill Publications.

[11] S. Mirzaei, A. Hosangadi, and R. Kastner, FPGA Implementation of High Speed FIR Filters Using Add and Shift Method, 2006

[12] R.Mahesh and A.P.Vinod, "New reconfigurable architectures for implementation FIR filters with low complexity," IEEE Trans. Computer Aided Design Integr. Circuits Syst., vol. 29, no.2,Feb. 2010.

[13] Y P SANG and P K MEHER, "Efficient FPGA and ASIC realizations of a DA-based reconfigurable FIR digital filter [J]", IEEE Transactions on Circuits and Systems II Express Briefs, vol. 61, no. 7, pp. 511-515, 2014.

[14] ZHAO An, YAN Yi-hua, CHEN Lin-jie et al., "Improved design of high-speed FIR digital filter based on FPGA [J]", Astronomy Research and Technology, vol. 1, pp. 109-116, 2015.

[15] Cao Zhenji and He Min, "FIR digital filter based on FPGA and Matlab [J]", Modern Electronic Technology, vol. 38, no. 1, pp. 98-102, 2015.

[16] YANG Da-zhu, "Design and Simulation of FIR Filter in MATLAB Environment [J]", Application of Electronic Technology, vol. 32, no. 09, pp. 101-103, 2006.

[17] J.H.Chai, N.Banerjee, and K.Roy, "Variation aware low power synthesis methodology fir fixed point FIR filters," IEEE Trans. Comput. Aided Des. Integr. Circuits Syst., vol.28, pp.87-97,2009.

[18] K.H.Chen and T.D.Chiueh, "A low power digit based reconfigurable FIR filter," IEEE Trans. CircuitsSyst. II vol.53, no.8, pp. 617-621. Aug. 2006.

[19] Chao-Huang Wei, Hsiang-Chieh Hsiao, Su-Wei Tsai "FPGA Implementation of FIR Filter with smallest Processor" IEEE NEWCAS conference,pp.337-340,19-22 June 2005.

Authorized licensed use limited to: ST. JOSEPH ENGINEERING COLLEGE MANGALORE. Downloaded on April 30,2026 at 04:22:54 UTC from IEEE Xplore. Restrictions apply.